GP Component

REV.	ECN NO.	LOCATIONS	DESCRIPTION	DATE	DESIGN
A0			Initial	2014/09/25	Phebe Su

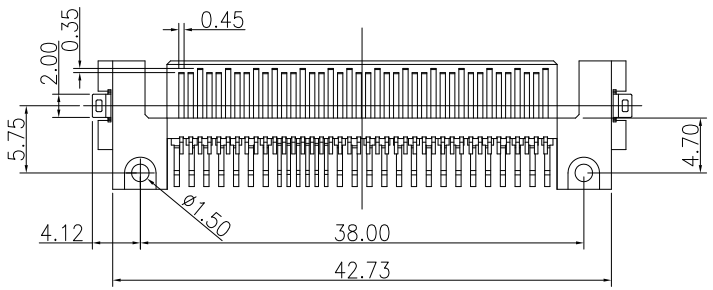

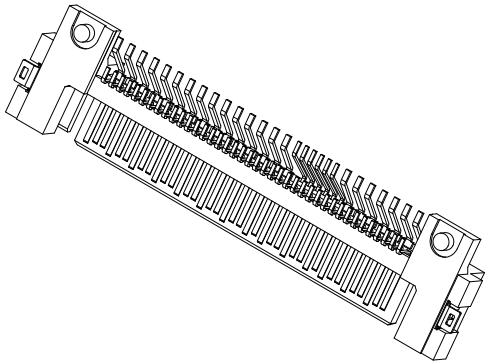

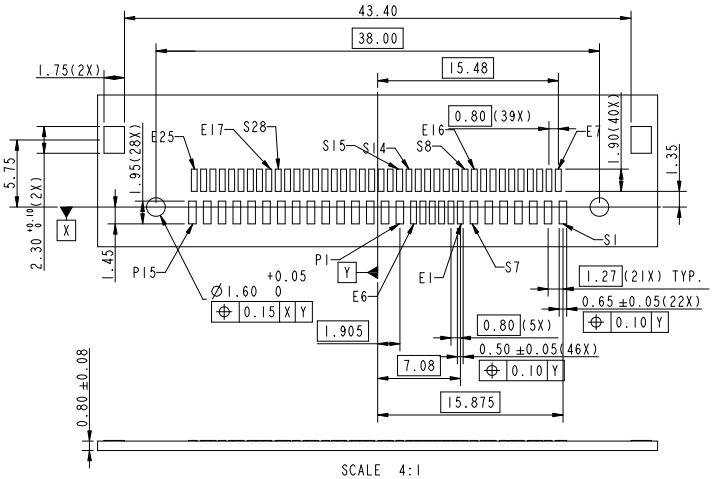

RECOMMENDED PCB LAYOUT
(GENERAL TOLERANCE: ±0.05)

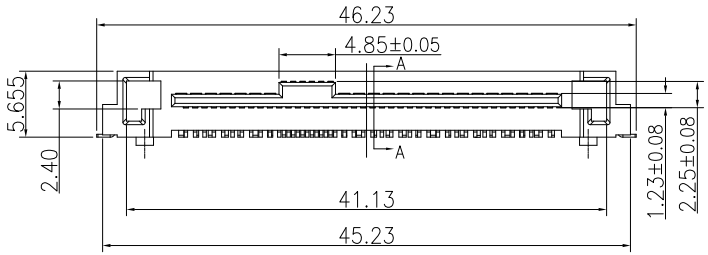

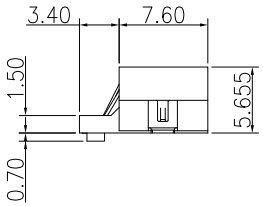

NOTES:
1. MATERIAL:
   HOUSING & CAP: HIGH TEMPERATURE THERMOPLASTIC, BLACK, UL94V-0
   CONTACT & HOLD DOWN: COPPER ALLOY
2. FINISH:
   CONTACT: 1.27um MIN. Ni UNDERPLATE OVERALL,
   1.91um MIN. 100% MATTE Sn(LEAD-FREE) ON SOLDERTAIL,
   0.76um MIN. Au ON CONTACT AREA
   HOLD DOWN: 1.91um MIN. 100% MATTE Sn(LEAD-FREE) OVER
   1.27um MIN. Ni UNDERPLATE OVERALL
3. PRODUCT SPECIFICATION: GS-12-
4. PACKAGING SPECIFICATION: GS-14-1038
5. THIS PRODUCT MEETS EUROPEAN UNION DIRECTIVES AND OTHER COUNTRY REGULATIONS AS DESCRIBED IN GS-47-0004
6. THE HOUSING WILL WITHSTAND EXPOSURE TO 260°C PEAK TEMPERATURE FOR 10 SECONDS IN A CONVECTION, INFRA-RED OR VAPOR PHASE REFLOW OVEN

MATRIX PART NO:

MST 68 - 01 - 40

- MST: MATRIX SATA
- 68: Pin Number
- 01: Planting
  01:Gold Flash
  15:15u"
  30:30u"
- 40: Series Number

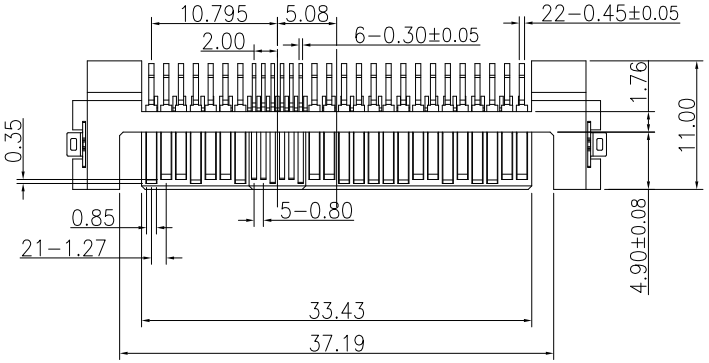

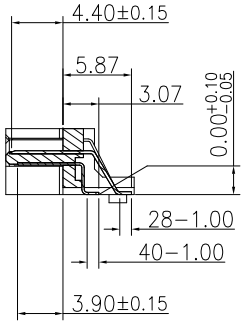

SECTION A-A

NO	VARIETY	QTY	METERIAL	REMARK

Matrix Electronics Co.,Ltd

TOLERANCE: X. ±; X.X ±0.25; X.XX ±0.10; X.XXX ±0.05; ANGLE: ±3°	DESIGN BY: Phebe Su	DATE: 2014/09/25	PART NAME: SAS/PCIE R/A SMT PLUG	
	CHECKED BY: Vicky Hsieh	DATE: 2014/09/25	PART NO.	MST68-01-40
	APPROVED BY1: Richard Hsieh	DATE: 2014/09/25	MOLD NO.	NA
UNIT: mm [inch]	APPROVED BY2: Richard Hsieh	DATE: 2014/09/25	DRAW NO.	
SCALE:1:1 SIZE:A4			SHEET NO.	1 OF 1